Activity 1 Worksheet
A New Look at Boxing

Name_____
Date_____Hr_____

1. Identify which of the following objects are prisms. If it is a prism, identify its type. If it is not a prism, **explain your reasoning.**

a.)

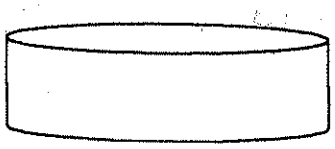

b.)

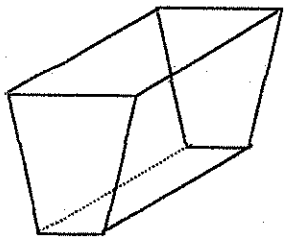

c.)

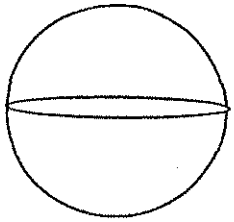

2. Find the area of each shape below. **Show all work.**

a.)

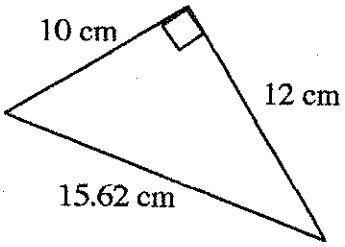

b.)

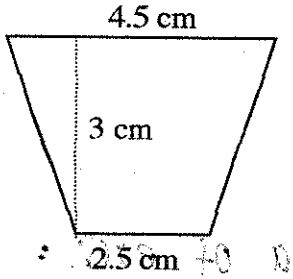

c.) (Regular Hexagon)

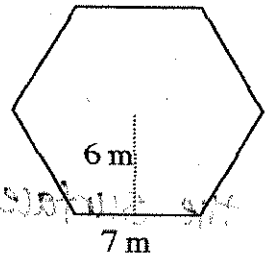

3 a.) Find the surface area of the prism. _____
Show work below.

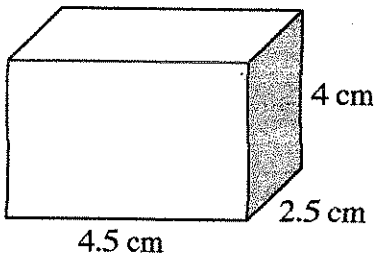

b.) Make **a scale drawing** of a net for the prism in Part **a**. *Do this on the attached grid paper.*

c.) Describe the dimensions of the smallest rectangle that would enclose the net in Part **b**.

d.) Find the area of the rectangle in Part **c**.

e.) Suppose you used a rectangular sheet of cardboard to construct the prism. What percentage of cardboard would be wasted? **Show work!**

3 a.) Find the surface area of the prism. _____
Show work below.

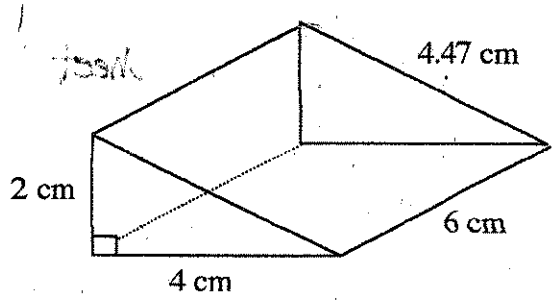

b.) Make **a scale drawing** of a net for the prism in Part **a**. *Do this on the attached grid paper.*

c.) Describe the dimensions of the smallest rectangle that would enclose the net in Part **b**.

d.) Find the area of the rectangle in Part **c**.

e.) Suppose you used a rectangular sheet of cardboard to construct the prism. What percentage of cardboard would be wasted? **Show work!**
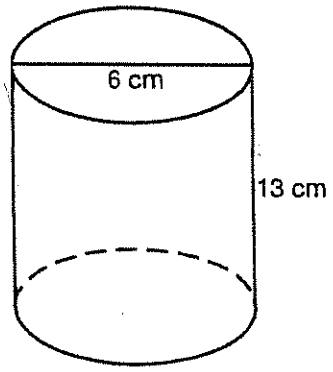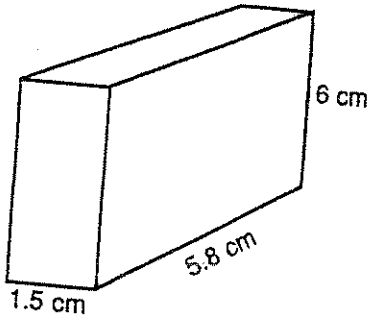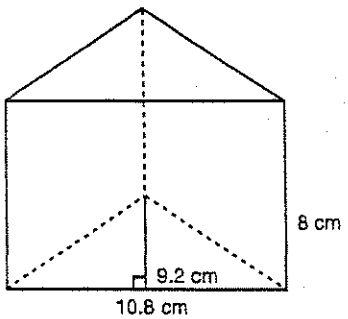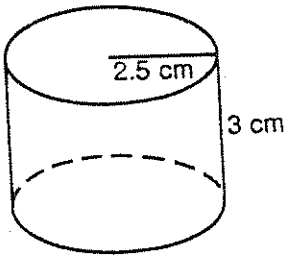
4. Find the surface area of each: